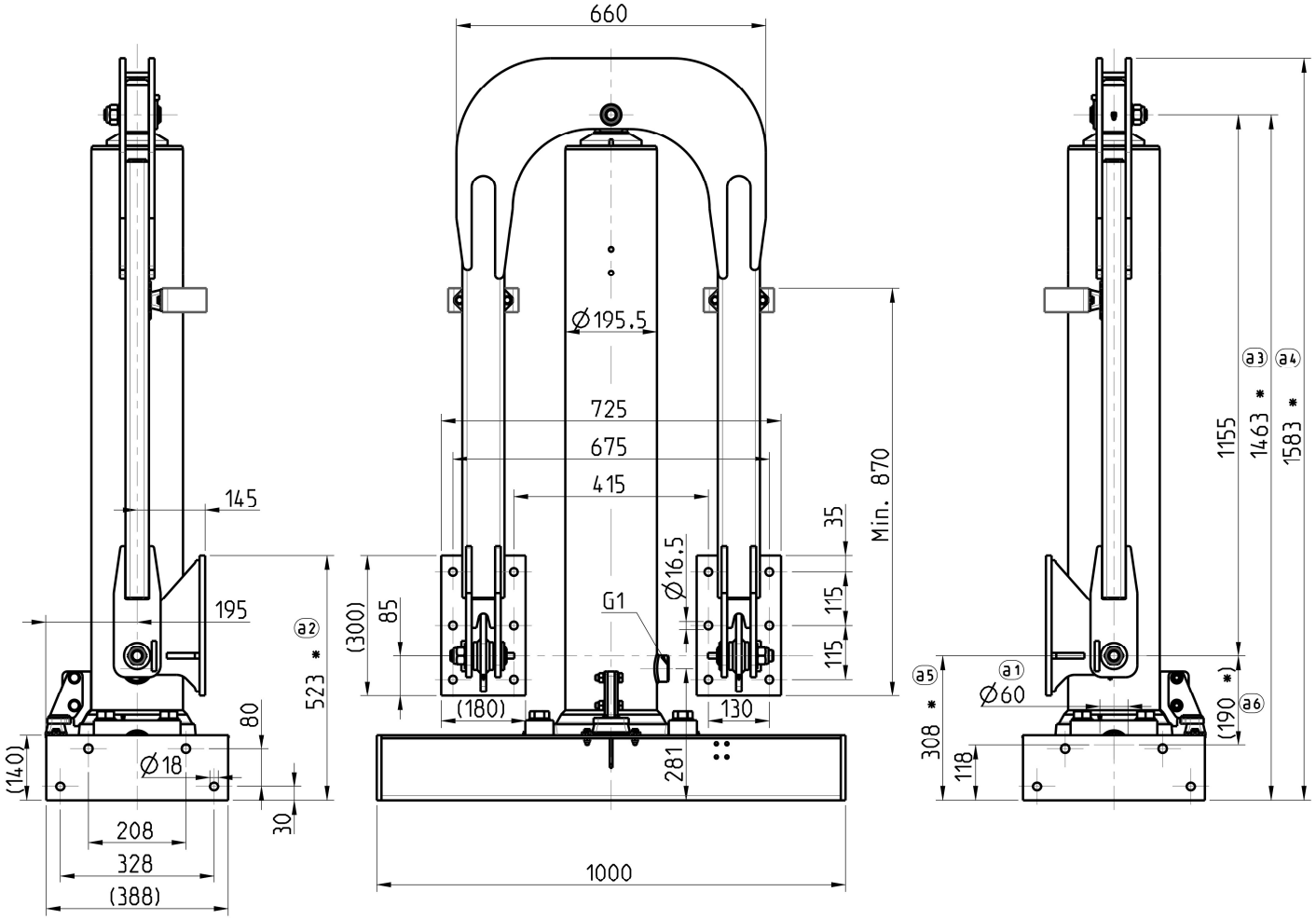

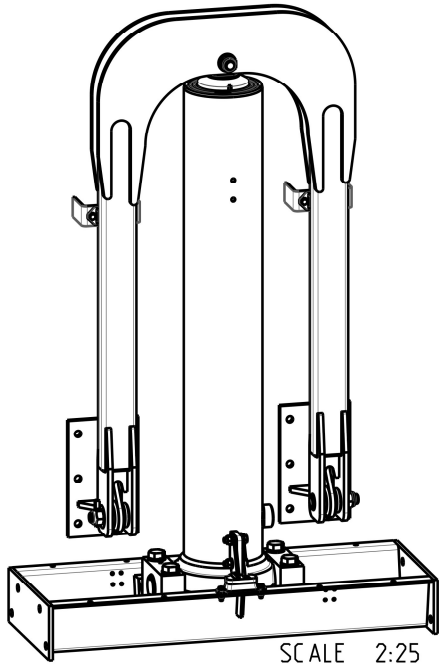

Suurin sylinterin
kippauskulma 32°/
Max cylinder tipping angle 32°

* Asennusvara/
Mounting space
+20...60 mm.

Max kuorma /load: 40t
Max paine /pressure: 170 bar (17 MPa)
Iskutilavuus / stroke vol: 87,5 dm³.

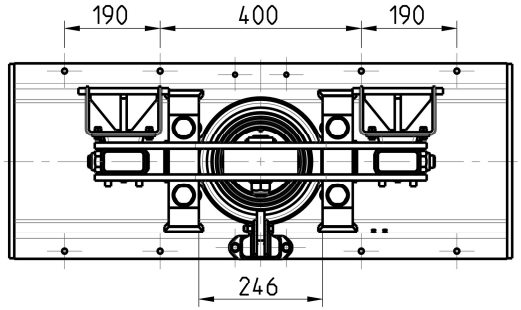

Vaihe/Stage	Isku/Stroke
Ø172	1100
Ø152	1110
Ø132	1120
Ø115	1110
Ø100	1106
Ø85	1100
TOTAL	6646

Date	Drawn	Revision
15.04.25	TDa	a1) Cylinder & lower mounting bracket (Ø60) changed a2)-a6) Dim. changed

Piirt Drawn TDa	GENERAL TOLERANCE: ISO 2768-m	Koodi Code -	
Pvm Date 12.11.15	THREAD TOLERANCE : ISO 965-3/ISO 228-1	Paino (kg) Weight 394,899	
Koko Size A3	WELD ACCORDING TO: ISO 5817	Material STD -	
Liittyy / Belongs to JTC		Material -	
Nimitys NY 195/ 85x6646		Suhde/Scale 1:10	Revision A
Name LU 195/ 85x6646		Piirustus no / Drawing no 310208748	

Ra µm

wipro

WIPRO INFRASTRUCTURE ENGINEERING OY PL 9 25501 Pernio Finland